# Installation Instructions HD-02/-03 Dash Bracket 2003 and 2010 Dodge

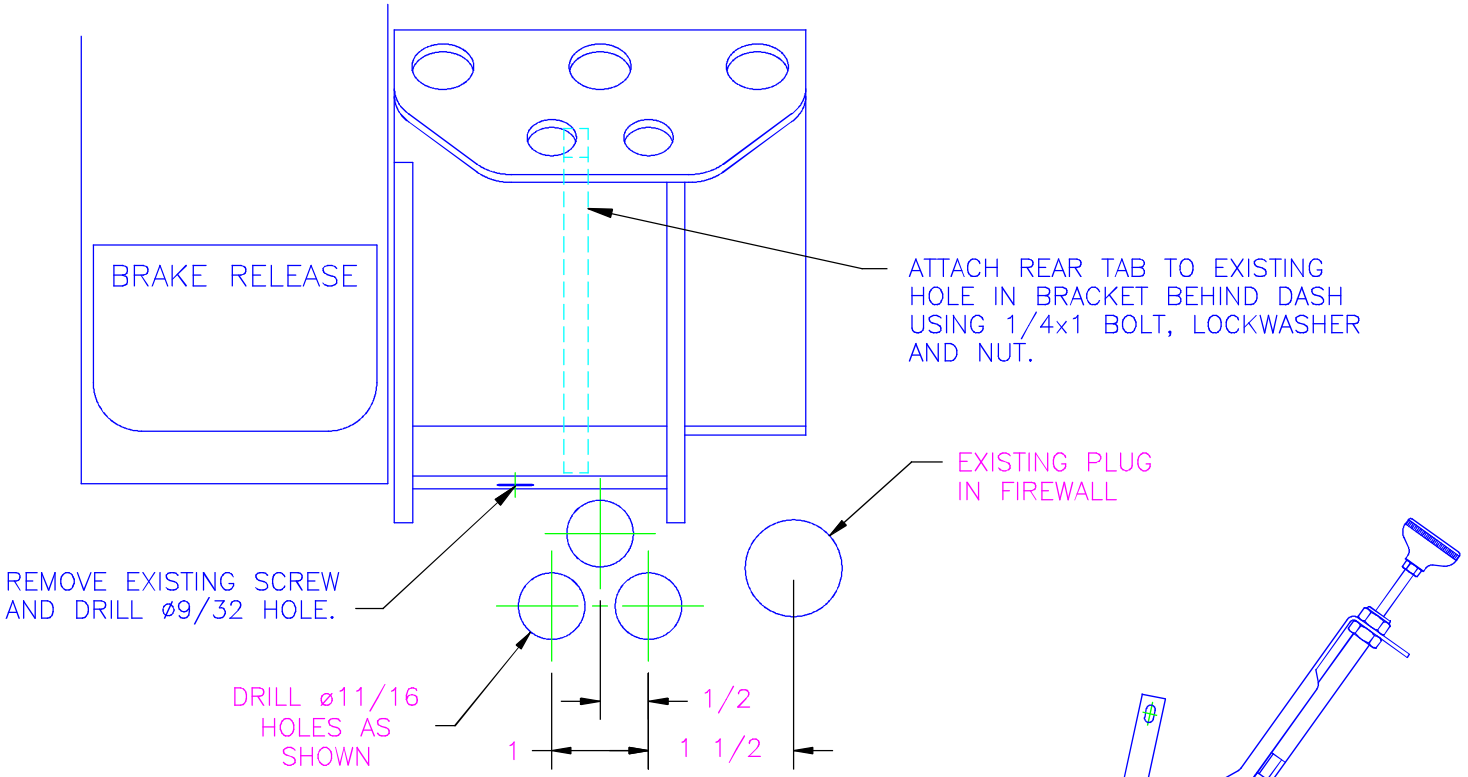


DRILL HOLES THROUGH ONE THICKNESS OF FIREWALL DIRECTLY FORWARD OF DASH BRACKET.

ATTACH DASH BRACKET USING 1/4x1 BOLTS, LOCK WASHERS AND NUTS.

AVOID ALL SHARP, ROTATING AND HOT CHASSIS COMPONENTS WHEN ROUTING CABLES.

CABLES SHOULD FOLLOW CONTOUR OF DASH BRACKET.

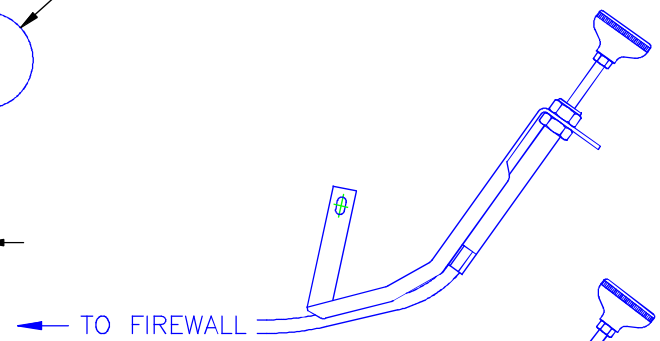


HD-02

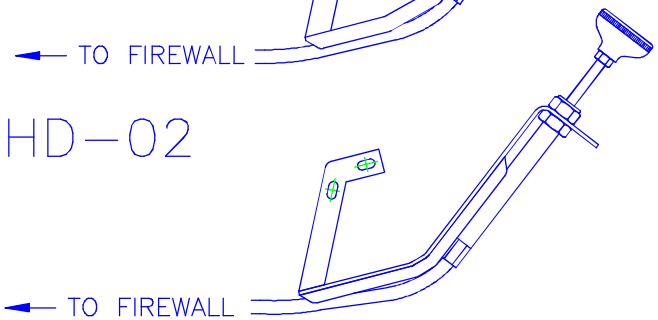


HD-03